CI TECH
SAFETY VALVES

SLK SERIES

SAFETY *VALVES*

CE

TÜVRheinland CERTIFIED
Management System ISO 9001:2015
www.tuv.com ID 9105022030

SLK SERIES

TABLE OF CONTENTS

ST. STEEL / CARBON STEEL

Introduction	Page 1
Version A	Page 2 - 3
Version B	Page 4 - 5
Version C	Page 6 - 7
Version D	Page 8 - 9
Version I	Page 14 - 15

COPPER ALLOY

Version E	Page 10 - 11
Version F	Page 12 - 13
Version H	Page 16 ÷ 23

SLK-Series is a direct loaded, carried exhaust and full lift safety valve manufactured with high quality materials which complies with the strictest international standards.

PART CODE DESCRIPTION

SLK x - xx xx xx - xxx

- MATERIAL CODE
- SPECIFICATION
- VERSION
- ORIFICE DIAMETER
- VALVE TYPE - C / L
- VALVE SERIES

Relief Valves SLK-Series are spring loaded pressure relieving devices, suitable for discharge of compressible fluids. SLK-series safety valves are used to protect personnel and equipment by preventing excessive pressure accumulation.

Coi Technology offers a large range of screwed and flanged valves in a variety of sizes, materials and options. The valves are of a full nozzle type and available in copper alloy or steel versions.

Application

- Air Compressors
- Steam generators / Boilers
- Autoclaves
- Technical gases
- Natural gas and technical gas compressors

Materials

AISI 316L, Brass, Bronze, Carbon steel, Duplex, Monel.

Design

- Construction:	Carried exhaust and free discharge
- Seat sealing type:	PTFE, PEEK, Metal to Metal, Viton, Nbr, Kalrez, EPDM
- Connections:	Screwed and flanged (ANSI / DIN)
- Connections types:	NPT, GAS/BSPP
- Flange ratings:	ASME 150 ÷ 2500 / PN16 ÷ PN 400
- Sizes:	1/2" ÷ 2" / DN 15 ÷ DN 50
- Orifices:	6, 8, 10, 14, 20, 25, 30, 38 mm
- Characteristic:	Full lift
- Overpressure:	10%
- Blowdown:	15%
- Discharge coeff. Kd:	0.94
- Temperature range:	-196°C + 350°C
- Set pressure range:	0.5 ÷ 690 barg (steel version)
- Set pressure range:	0.5 ÷ 50 barg (Brass version)
- Design standard	EN 4126-1

Approvals

- CE marking according to 2014/68/EU (new PED) mod. H1
- 2014/34/EU (ATEX)
- EAC (EurAsian Conformity mark (EAC, Russian: Евразийское соответствие)

VERSION "A"

DESCRIPTION

SLK-Series is a direct loaded, carried exhaust and full lift safety valve manufactured with high quality materials which complies with the strictest international standards.

CHARACTERISTICS		
Orifice diameter	6 mm	
Orifice area	0.28 cm²	
Inlet connection	1/4" - 1/2"	
Outlet connection	1/4" - 1/2"	
ND inlet max.	15 mm	
ND outlet	15 mm	
Setting range	0,5 bar - 650 bar	
Discharge coefficient kd	0,94	
Lift to discharge pressure	2.7 mm	
Overpressure	10%	
Blowdown	15%	
Temperature range	from -45° C to +200° C	
Fluids	Gas	

TYPE APPROVAL

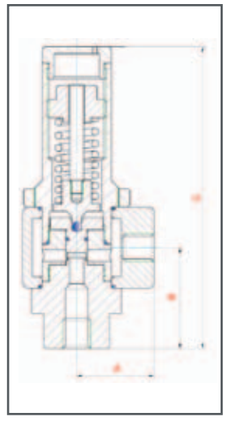

DIMENSIONS

XX=Orifice	XX=Specification	Connections type		A	B	C	WEIGHT
		in	out	mm	mm	mm	kg
06	01	1/2" NPT-F	1/4"-1/2" NPT-F GAS-F				
06	10	1/4" NPT-F		33	43.5	130	1,0
06	14	1/2" NPT-F					
06	38	1/4" NPT-F					

MATERIALS

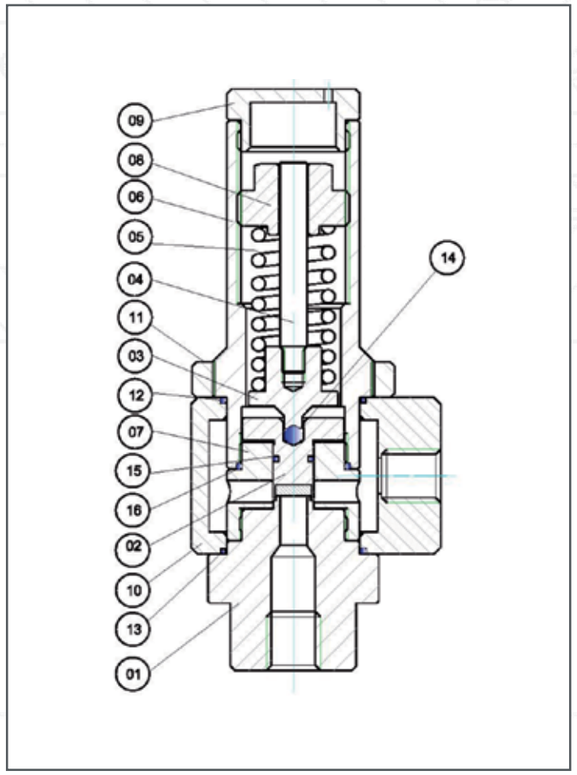

PART NAME		MATERIAL CODE	
		011	012
01	NOZZLE	AISI 316L	AISI 316L
02	DISC	AISI 316L/PTFE	AISI 316L/PEEK
03	LOWER WASHER	AISI 316L	AISI 316L
04	STEM	AISI 316L	AISI 316L
05	SPRING	ALL. STEEL	ALL. STEEL
06	BONNET	AISI 316L	AISI 316L
07	GUIDE	AISI 316L	AISI 316L
08	SET SCREW	AISI 316L	AISI 316L
09	CAP	AISI 316L	AISI 316L
10	BODY	AISI 316L	AISI 316L
11	LOCK NUT	AISI 316L	AISI 316L
12	BALL	VITON	VITON
13	GASKET	VITON	VITON
14	BALL	AISI 316	AISI 316
15	GASKET	VITON	VITON
16	GASKET	VITON	VITON

VERSION "B"

DESCRIPTION

SLK-Series is a direct loaded, carried exhaust and full lift safety valve manufactured with high quality materials which complies with the strictest international standards.

CHARACTERISTICS

Orifice diameter	08 mm	10 mm
Orifice area	0.502 cm²	0.785 cm²
Inlet connection	1/2" - 3/4" - 1"	1/2" - 3/4" - 1"
Outlet connection	1"	1"
ND inlet max.	25 mm	25 mm
ND outlet	25 mm	25 mm
Setting range	0,5 bar - 450 bar	0,5 bar - 380 bar
Discharge coefficient kd	0,94	0,94
Lift to discharge pressure	3.5 mm	4.5 mm
Overpressure	10%	10%
Blowdown	15%	15%
Temperature range	from -45° C to +200° C	from -45° C to +200° C
Fluids	Gas	Gas

TYPE APPROVAL

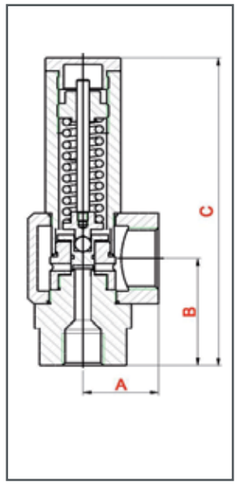

DIMENSIONS

XX=Orifice	XX=Specification	Connections type		A	B	C	WEIGHT
		in	out	mm	mm	mm	kg
08	04	1/2" NPT-M	1" NPT-F / GAS-F				
08	44	3/4" NPT-F		37	55	162	2,5
08	35	3/4" NPT-F					
10	6A	3/4" NPT-F					
10	95	3/4" NPT-F					

MATERIALS

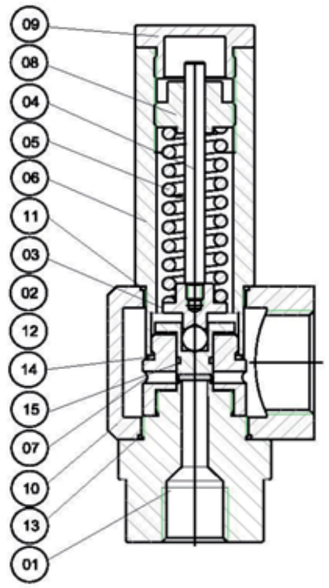

PART NAME		MATERIAL CODE			
		011	012	038	055
01	NOZZLE	AISI 316L	AISI 316L	AISI 316L	AISI 316L
02	DISC	AISI 316L/PTFE	AISI 316L/PEEK	AISI 316L/PEEK	AISI 316L/PTFE
03	LOWER WASHER	AISI 316L	AISI 316L	AISI 316L	AISI 316L
04	STEM	AISI 316L	AISI 316L	AISI 316L	AISI 316L
05	SPRING	ALL. STEEL	ALL. STEEL	ALL. STEEL	ALL. STEEL
06	BONNET	AISI 316L	AISI 316L	CARB. STEEL	CARB. STEEL
07	GUIDE	AISI 316L	AISI 316L	AISI 316L	AISI 316L
08	SET SCREW	AISI 316L	AISI 316L	AISI 316L	AISI 316L
09	CAP	AISI 316L	AISI 316L	CARB. STEEL	CARB. STEEL
10	BODY	AISI 316L	AISI 316L	AISI 316L	AISI 316L
11	GASKET	VITON	VITON	VITON	VITON
12	BALL	AISI 316	AISI 316	AISI 316	AISI 316
13	GASKET	VITON	VITON	VITON	VITON
14	GASKET	VITON	VITON	VITON	VITON
15	GASKET	VITON	VITON	VITON	VITON

VERSION "C"

DESCRIPTION

SLK-Series is a direct loaded, carried exhaust and full lift safety valve manufactured with high quality materials which complies with the strictest international standards.

CHARACTERISTICS		
Orifice diameter	6 / 8 / 10 mm	14 mm
Orifice area	0.28 / 0.502 / 0.785 cm^2	1.54 cm^2
Inlet connection	1/2" - 3/4" - 1"	3/4" - 1"
Outlet connection	1"	1"
ND inlet max.	25 mm	25 mm
ND outlet	25 mm	25 mm
Setting range	0,5 bar - 750 bar	0,5 bar - 180 bar
Discharge coefficient kd	0,94	0,94
Lift to discharge pressure	2.7 / 3.5 / 4.5 mm	6.5 mm
Overpressure	10%	10%
Blowdown	15%	15%
Temperature range	from -196° C to +200° C	from -196° C to +200° C
Fluids	Gas	Gas

TYPE APPROVAL

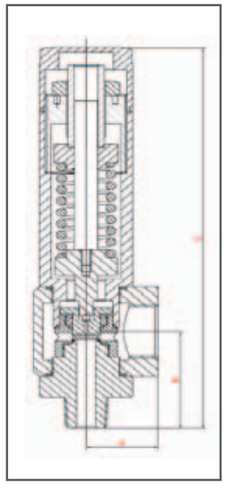

DIMENSIONS

XX=Orifice	XX=Specification	Connections type		A	B	C	WEIGHT
		in	out	mm	mm	mm	kg
10		1/2" NPT-M	1" NPT-F				
10		1/2" NPT-F		37	72	248	3,0
10		3/4" NPT-F					
14		3/4" NPT-F					
14		3/4" NPT-F					

MATERIALS

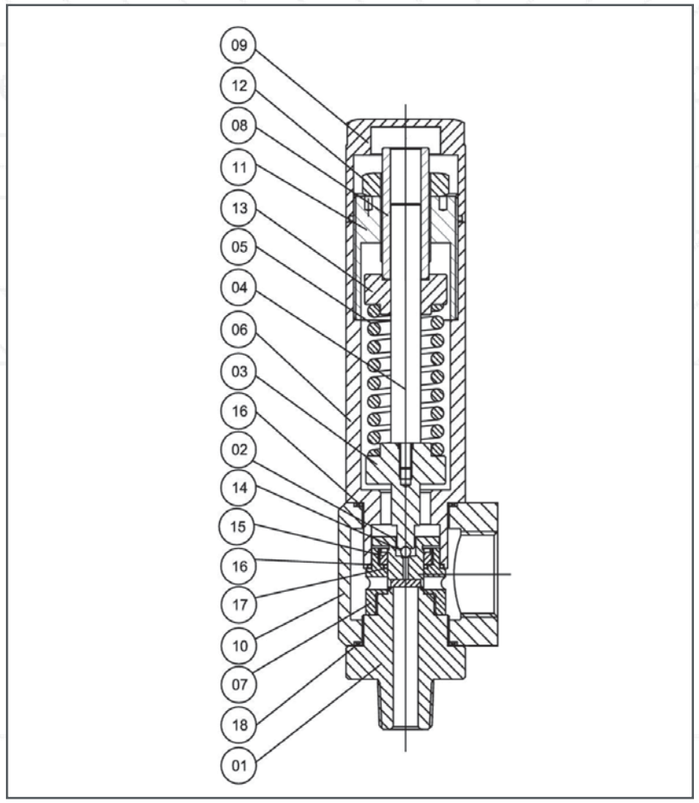

PART NAME		MATERIAL CODE			
		055	038	011	012
01	NOZZLE	AISI 316L	AISI 316L	AISI 316L	AISI 316L
02	DISC	AISI 316L/PTFE	AISI 316L/PEEK	AISI 316L/PTFE	AISI 316L/PEEK
03	LOWER WASHER	CARBON. STEEL	CARBON. STEEL	AISI 316L	AISI 316L
04	STEM	BRASS	BRASS	AISI 316L	AISI 316L
05	SPRING	ALL. STEEL	ALL. STEEL	AISI 316	AISI 316
06	BONNET	CARBON. STEEL	CARBON. STEEL	AISI 316L	AISI 316L
07	GUIDE	BRASS	BRASS	AISI 316L	AISI 316L
08	SET SCREW	BRASS	BRASS	AISI 316L	AISI 316L
09	CAP	CARBON. STEEL	CARBON. STEEL	AISI 316L	AISI 316L
10	BODY	CARBON. STEEL	CARBON. STEEL	AISI 316L	AISI 316L
11	PRE SETT. SCREW	BRASS	BRASS	BRASS	BRASS
12	NUT	BRASS	BRASS	AISI 316L	AISI 316L
13	UPER WASHER	CARBON. STEEL	CARBON. STEEL	AISI 316L	AISI 316L
14	BALL	AISI 316	AISI 316	AISI 316	AISI 316
15	NUT	BRASS	BRASS	AISI 316L	AISI 316L
16	GASKET	VITON	VITON	VITON	VITON
17	GASKET	VITON	VITON	VITON	VITON
18	GASKET	VITON	VITON	VITON	VITON
19	GASKET	VITON	VITON	VITON	VITON

VERSION "D"

DESCRIPTION

SLK-Series is a direct loaded, carried exhaust and full lift safety valve manufactured with high quality materials which complies with the strictest international standards.

CHARACTERISTICS		
Orifice diameter	10 mm	14 mm
Orifice area	0.785 cm²	1.54 cm²
Inlet connection	1/2" - 3/4" - 1"	3/4" - 1"
Outlet connection	1 1/2"	1"
ND inlet max.	25 mm	25 mm
ND outlet	25 mm	25 mm
Setting range	0,5 bar - 380 bar	0,5 bar - 180 bar
Discharge coefficient kd	0,94	0,94
Lift to discharge pressure	4.5 mm	6.5 mm
Overpressure	10%	10%
Blowdown	15%	15%
Temperature range	from -45° C to +200° C	from -45° C to +200° C
Fluids	Gas	Gas

TYPE APPROVAL

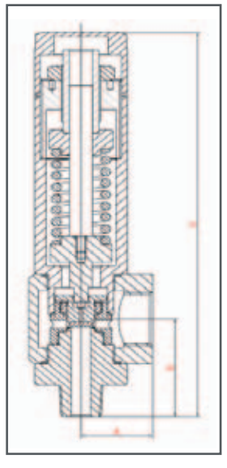

DIMENSIONS

XX=Orifice	XX=Specification	Connections type		A	B	C	WEIGHT
		in	out	mm	mm	mm	kg
10		1/2"	1 1/2" GAS-F				
10		3/4"		44	72	257	4,0
10		1"					
14		3/4"					
10		1"					

MATERIALS

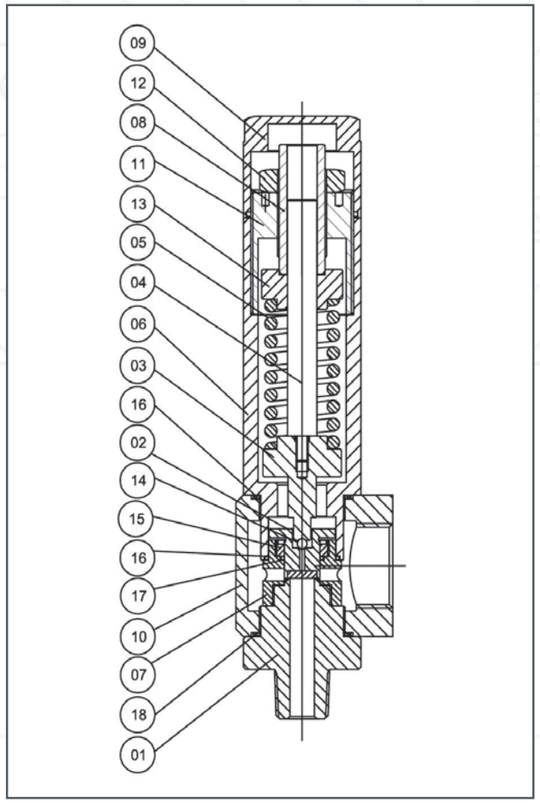

	PART NAME	MATERIAL CODE			
		055	038	011	012
01	NOZZLE	AISI 316L	AISI 316L	AISI 316L	AISI 316L
02	DISC	AISI 316L/PTFE	AISI 316L/PEEK	AISI 316L/PTFE	AISI 316L/PEEK
03	LOWER WASHER	CARBON. STEEL	CARBON. STEEL	AISI 316L	AISI 316L
04	STEM	BRASS	BRASS	AISI 316L	AISI 316L
05	SPRING	ALL. STEEL	ALL. STEEL	AISI 316	AISI 316
06	BONNET	CARBON. STEEL	CARBON. STEEL	AISI 316L	AISI 316L
07	GUIDE	BRASS	BRASS	AISI 316L	AISI 316L
08	SET SCREW	BRASS	BRASS	AISI 316L	AISI 316L
09	CAP	CARBON. STEEL	CARBON. STEEL	AISI 316L	AISI 316L
10	BODY	CARBON. STEEL	CARBON. STEEL	AISI 316L	AISI 316L
11	PRE SETT. SCREW	BRASS	BRASS	BRASS	BRASS
12	NUT	BRASS	BRASS	AISI 316L	AISI 316L
13	UPER WASHER	CARBON. STEEL	CARBON. STEEL	AISI 316L	AISI 316L
14	BALL	AISI 316	AISI 316	AISI 316	AISI 316
15	NUT	BRASS	BRASS	AISI 316L	AISI 316L
16	GASKET	VITON	VITON	HNBR	HNBR
17	GASKET	VITON	VITON	HNBR	HNBR
18	GASKET	VITON	VITON	HNBR	HNBR
19	GASKET	VITON	VITON	HNBR	HNBR

VERSION "E"

DESCRIPTION

SLK-Series is a direct loaded, carried exhaust and full lift safety valve manufactured with high quality materials which complies with the strictest international standards.

CHARACTERISTICS		
Orifice diameter	10 mm	
Orifice area	0.785 cm²	
Inlet connection	3/8" - 1/2"	
Outlet connection	1/2"	
ND inlet max.	15 mm	
ND outlet	15 mm	
Setting range	0,5 bar - 45 bar	
Discharge coefficient kd	0,94 gas	
Lift to discharge pressure	4.5 mm	
Overpressure	10%	
Blowdown	15%	
Temperature range	from -196° C to +200° C	
Fluids	Gas	
Materials	See attached dwg	

TYPE APPROVAL

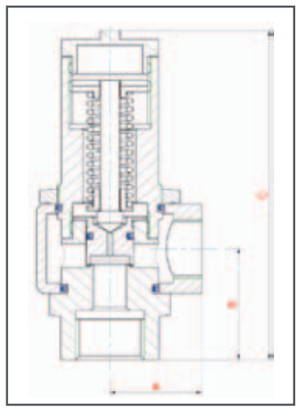

DIMENSIONS

Connections type			A	B	C	WEIGHT
XX = Specification	in	out	mm	mm	mm	kg
2C	3/8" GAS-F	1/2" GAS-F				
79	1/2" GAS-F		28	38,5	115	**1,0**

MATERIALS

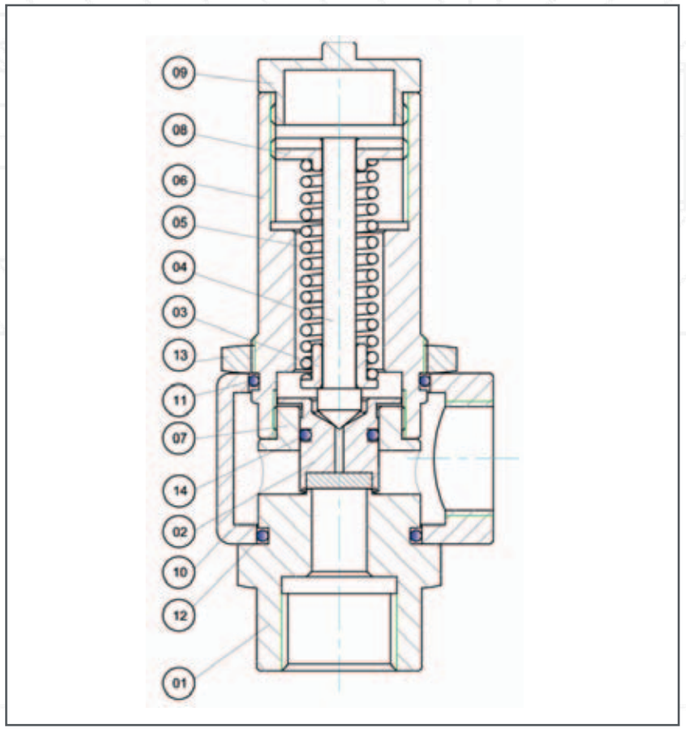

	PART NAME	MATERIAL CODE
		108
01	NOZZLE	BRASS
02	DISC	BRASS
03	LOWER WASHER	BRASS / VITON
04	STEM	BRASS
05	SPRING	AISI 316
06	BONNET	BRASS
07	GUIDE	BRASS
08	SET SCREW	BRASS
09	CAP	BRASS
10	BODY	BRASS
11	GASKET	VITON
12	GASKET	VITON
13	NUT	BRASS
14	GASKET	VITON

VERSION "F"

DESCRIPTION

SLK-Series is a direct loaded full lift safety valve, available as free or carried exhaust and manufactured with high quality materials which comply with the strictest international standards.

MATERIALS	
NOZZLE	BRASS / AISI 316L
DISC	BRASS / AISI 316L
BODY	BRASS / AISI 316L
SPRING	C85 / AISI 316
SEAT	Elastomer, plastic o metal

CHARACTERISTICS	
Orifice diameter	10 mm
Orifice area	0.785 cm^2
Inlet connection	1/2" - 3/4"
Outlet connection	1/2" - 3/4"
Setting range	0,5 bar - 160 bar
Discharge coefficient kd	0,937 gas
Lift to discharge pressure	4.5 mm
Overpressure	10%
Blowdown	15%
Temperature range	-196° C +250° C
Fluids	Gas - steam

MATERIALS

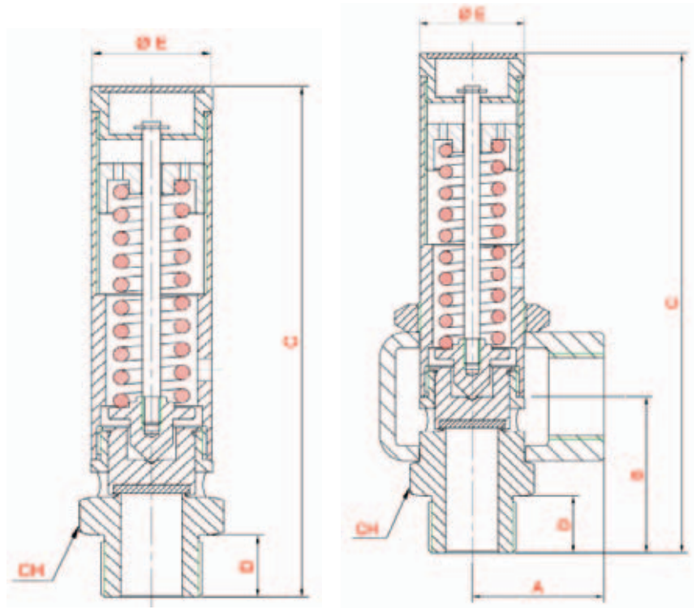

SLKL-10F SLKC-10F

DIMENSIONS			
	SLKL-10F	SLKC-10F	
A		28	
B		53	
C	150	155	
D	17	17	
E	31,5	29,5	
CH	32	32	

VERSION "I"

DESCRIPTION

SLK-Series is a direct loaded, carried exhaust and full lift safety valve manufactured with high quality materials which complies with the strictest international standards.

CHARACTERISTICS		
Orifice diameter	6 mm	10 mm
Orifice area	0.28 cm²	0.785 cm²
Inlet connection	1/4" - 1/2"	1/2"
Outlet connection	1/4" - 1/2"	1/2"
ND inlet max.	15 mm	15 mm
ND outlet	15 mm	15 mm
Setting range	0,5 bar - 650 bar	0,5 bar - 350 bar
Discharge coefficient kd	0,94 gas	0,94 gas
Lift to discharge pressure	2.7 mm	4.5 mm
Overpressure	10%	10%
Blowdown	15%	15%
Temperature range	from -196° C to +200° C	from -196° C to +200° C
Fluids	Gas	Gas

TYPE APPROVAL

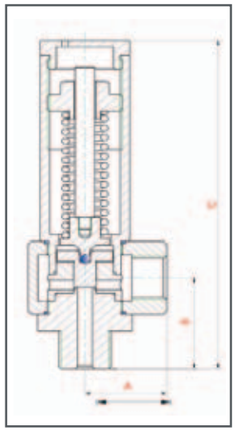

DIMENSIONS

XX=Orifice	XX=Specification	Connections type		A	B	C	WEIGHT
		in	out	mm	mm	mm	kg
10	86	1/2" NPT-F	1/4"-1/2" NPT-F GAS-F				
10	3C	1/2" NPT-M		33	43.5	158	1,2
10	82	1/2" GAS-F					
10	1C	1/2" GAS-M					

MATERIALS

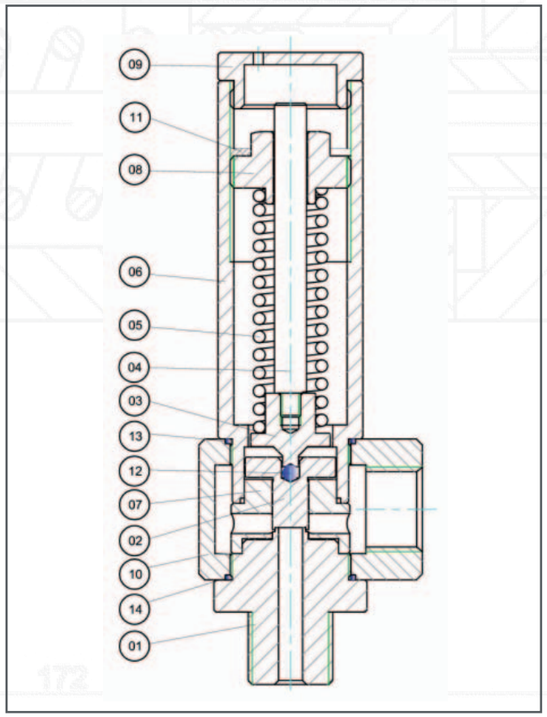

PART NAME		MATERIAL CODE		
		011	012	020
01	NOZZLE	AISI 316L	AISI 316L	AISI 316L
02	DISC	AISI 316L/PTFE	AISI 316L/PEEK	MONEL
03	LOWER WASHER	AISI 316L	AISI 316L	AISI 316L
04	STEM	AISI 316L	AISI 316L	AISI 316L
05	SPRING	AISI 316	AISI 316	AISI 316
06	BONNET	AISI 316L	AISI 316L	AISI 316L
07	GUIDE	AISI 316L	AISI 316L	AISI 316L
08	SET SCREW	BRASS	BRASS	BRASS
09	CAP	AISI 316L	AISI 316L	AISI 316L
10	BODY	AISI 316L	AISI 316L	AISI 316L
11	SEEGER	AISI 316L	AISI 316L	AISI 316L
12	BALL	AISI 316	AISI 316	AISI 316
13	GASKET	PTFE	PTFE	PTFE
14	GASKET	PTFE	PTFE	PTFE

VERSION "H"

CHARACTERISTICS

Orifice ø / mm	8	10	14	18	25	30	38
Discharge area / cm^2	0.502	0.785	1.54	2.54	4.91	7.06	11.34
Pressure range / bar	0.5 ÷35	0.5 ÷ 35	0.5 ÷ 35	0.5 ÷ 35	0.5 ÷ 45	0.5 ÷ 35	0.5 ÷ 35

INLET CONNECTIONS

Threaded	1/4" - 2"	NPT / GAS
Flanged	1/2" - 2"	ANSI / DIN

OUTLET CONNECTIONS

FREE EXHAUST		
Threaded	1/2" - 2 1/2"	NPT / GAS
Flanged	1/2" - 2 1/2"	ANSI / DIN

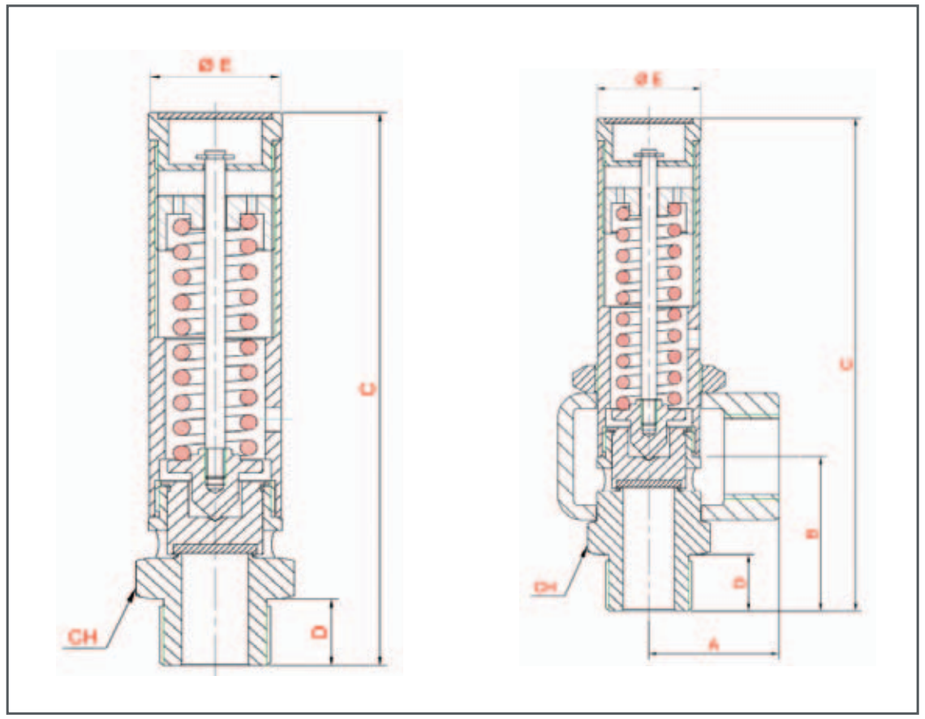

VERSION "H" 8 mm

DESCRIPTION

SLK-Series is a direct loaded full lift safety valve, available as free or carried exhaust and manufactured with high quality materials which comply with the strictest international standards.

MATERIALS

NOZZLE	BRASS / AISI 316L
DISC	BRASS / AISI 316L
BODY	BRASS / AISI 316L
SPRING	C85 / AISI 316
SEAT	Elastomer, plastic

CHARACTERISTICS

Orifice diameter	8 mm
Orifice area	0.502 cm^2
Inlet connection	1/4" - 1/2"
Outlet connection	1/4" - 1/2"
Setting range	0,5 bar - 35 bar
Discharge coefficient kd	0,937 gas
Lift to discharge pressure	3.5 mm
Overpressure	10%
Blowdown	15%
Temperature range	-196° C +250° C
Fluids	Gas - steam

TYPE APPROVAL

DIMENSIONS

	SLKL - 08H	SLKC - 08H	
A		28	
B		31	
C	70	85	
D	12	12	
E	20	22,5	
CH	20	24	

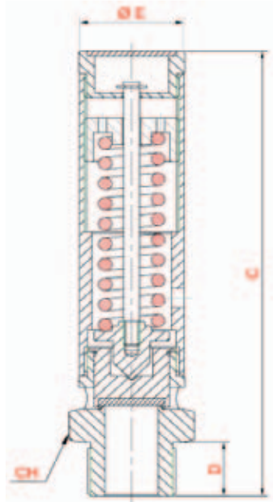

SLKL - 08H

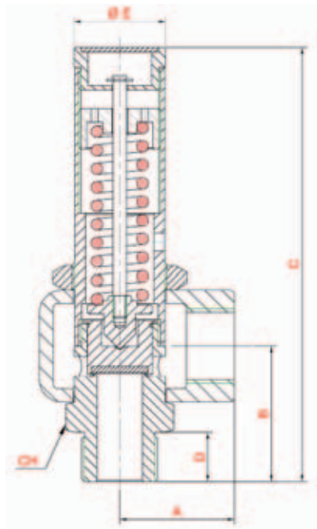

SLKC - 08H

VERSION "H" 10 mm

DESCRIPTION

SLK-Series is a direct loaded full lift safety valve, available as free or carried exhaust and manufactured with high quality materials which comply with the strictest international standards.

MATERIALS	
NOZZLE	BRASS / AISI 316L
DISC	BRASS / AISI 316L
BODY	BRASS / AISI 316L
SPRING	C85 / AISI 316
SEAT	Elastomer, plastic o metal

CHARACTERISTICS	
Orifice diameter	10 mm
Orifice area	0.785 cm^2
Inlet connection	3/8" - 1/2"
Outlet connection	1/2"
Setting range	0,5 bar - 35 bar
Discharge coefficient kd	0,937 gas
Lift to discharge pressure	4.5 mm
Overpressure	10%
Blowdown	15%
Temperature range	-196° C +250° C
Fluids	Gas - steam

TYPE APPROVAL

DIMENSIONS			
	SLKL - 10H	SLKC - 10H	
A		28	
B		31	
C	106	106	
D	12	12	
E	22,5	22,5	
CH	24	24	

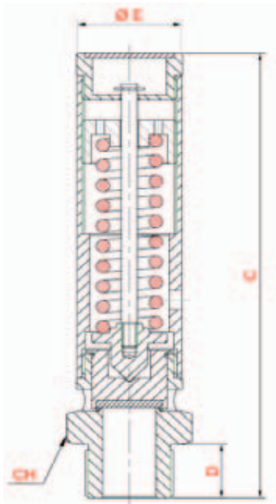

SLKL - 10H

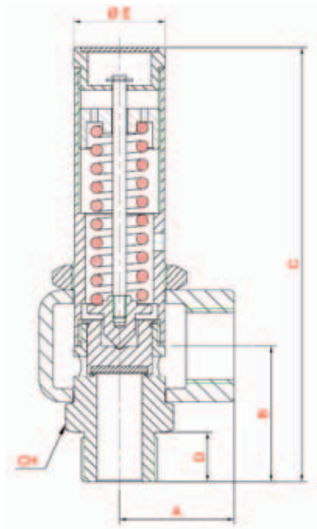

SLKC - 10H

VERSION "H" 14 mm

DESCRIPTION

SLK-Series is a direct loaded full lift safety valve, available as free or carried exhaust and manufactured with high quality materials which comply with the strictest international standards.

MATERIALS	
NOZZLE	BRASS / AISI 316L
DISC	BRASS / AISI 316L
BODY	BRASS / AISI 316L
SPRING	C85 / AISI 316
SEAT	Elastomer, plastic o metal

CHARACTERISTICS	
Orifice diameter	14 mm
Orifice area	1.54 cm^2
Inlet connection	1/2" - 3/4"
Outlet connection	1/2" - 3/4"
Setting range	0,5 bar - 35 bar
Discharge coefficient kd	0,937 gas
Lift to discharge pressure	6.5 mm
Overpressure	10%
Blowdown	15%
Temperature range	-196° C +250° C
Fluids	Gas - steam

TYPE APPROVAL

DIMENSIONS			
	SLKL - 14H	SLKC - 14H	
A		31	
B		40	
C	132	142	
D	15	15	
E	30	30	
CH	32	32	

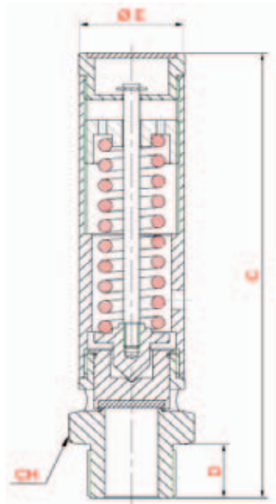

SLKL - 14H

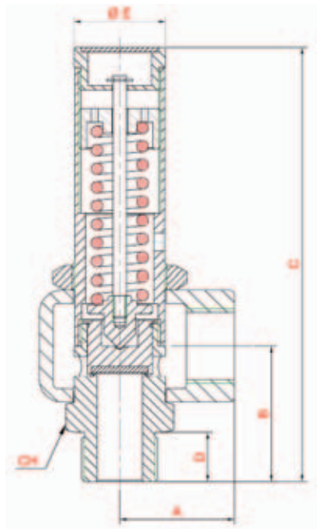

SLKC - 14H

VERSION "H" 18 mm

DESCRIPTION

SLK-Series is a direct loaded full lift safety valve, available as free or carried exhaust and manufactured with high quality materials which comply with the strictest international standards.

MATERIALS	
NOZZLE	BRASS / AISI 316L
DISC	BRASS / AISI 316L
BODY	BRASS / AISI 316L / CARBON STEEL
SPRING	C85 / AISI 316
SEAT	Elastomer, plastic o metal

CHARACTERISTICS	
Orifice diameter	18 mm
Orifice area	2.54 cm^2
Inlet connection	3/4" - 1"
Outlet connection	1 1/2"
Setting range	0,5 bar - 35 bar
Discharge coefficient kd	0,937 gas
Lift to discharge pressure	8 mm
Overpressure	10%
Blowdown	15%
Temperature range	-196° C +250° C
Fluids	Gas - steam

TYPE APPROVAL

DIMENSIONS			
	SLKL - 18H	SLKC - 18H	
A		63	
B		69	
C	181	207	
D	20	20	
E	40	40	
CH	41	41	

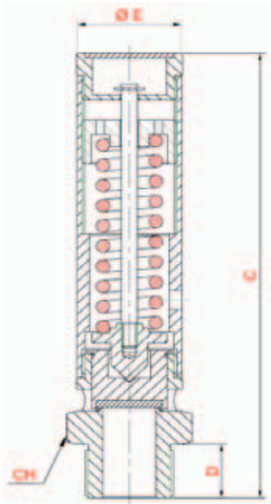

SLKL - 18H

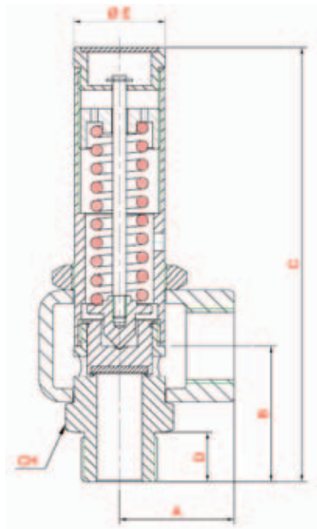

SLKC - 18H

VERSION "H" 25 mm

DESCRIPTION

SLK-Series is a direct loaded full lift safety valve, available as free or carried exhaust and manufactured with high quality materials which comply with the strictest international standards.

MATERIALS	
NOZZLE	BRASS / AISI 316L
DISC	BRASS / AISI 316L
BODY	BRASS / AISI 316L / CARBON STEEL
SPRING	C85 / AISI 316
SEAT	Elastomer, plastic o metal

CHARACTERISTICS	
Orifice diameter	25 mm
Orifice area	4.91 cm^2
Inlet connection	1 1/4" - 1 1/2"
Outlet connection	1 1/2"
Setting range	0,5 bar - 45 bar
Discharge coefficient kd	0,937 gas
Lift to discharge pressure	11.5 mm
Overpressure	10%
Blowdown	15%
Temperature range	-196° C +250° C
Fluids	Gas - steam

TYPE APPROVAL

DIMENSIONS			
	SLKL - 25H	SLKC - 25H	
A		70	
B		77	
C	237	266	
D	23	23	
E	60	60	
CH	60	60	

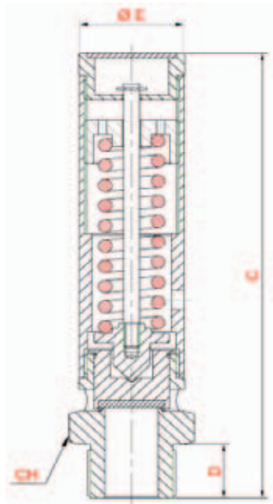

SLKL - 25H

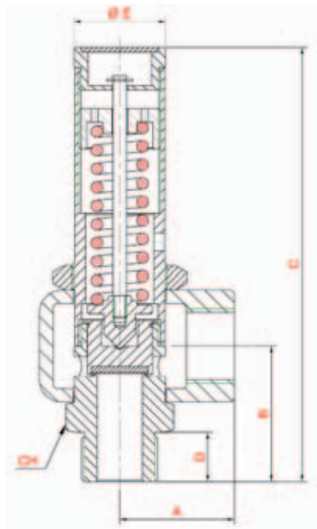

SLKC - 25H

VERSION "H" 30 mm

DESCRIPTION

SLK-Series is a direct loaded full lift safety valve, available as free or carried exhaust and manufactured with high quality materials which comply with the strictest international standards.

MATERIALS	
NOZZLE	BRASS / AISI 316L
DISC	BRASS / AISI 316L
BODY	BRASS / AISI 316L / CARBON STEEL
SPRING	C85 / AISI 316
SEAT	Elastomer, plastic o metal

CHARACTERISTICS	
Orifice diameter	30 mm
Orifice area	7.06 cm^2
Inlet connection	1 1/2"
Outlet connection	2"
Setting range	0,5 bar - 35 bar
Discharge coefficient kd	0,937 gas
Lift to discharge pressure	13.5 mm
Overpressure	10%
Blowdown	15%
Temperature range	-196° C +250° C
Fluids	Gas - steam

TYPE APPROVAL

DIMENSIONS			
	SLKL- 30H	SLKC - 30H	
A		74	
B		84	
C	262	280	
D	25	25	
E	60	60	
CH	60	60	

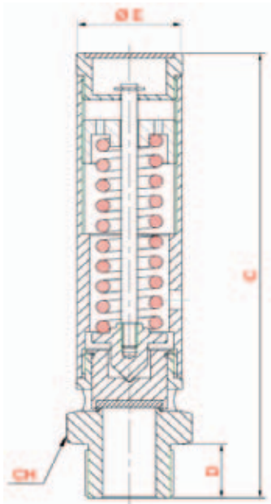

SLKL - 30H

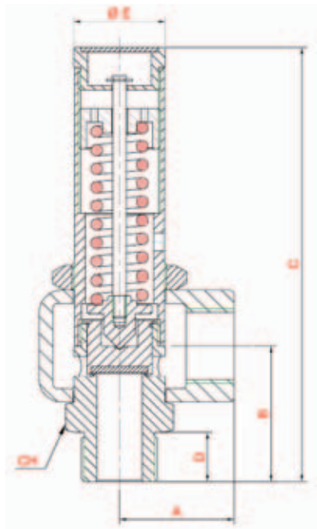

SLKC - 30H

VERSION "H" 38 mm

DESCRIPTION

SLK-Series is a direct loaded full lift safety valve, available as free or carried exhaust and manufactured with high quality materials which comply with the strictest international standards.

MATERIALS	
NOZZLE	BRASS / AISI 316L
DISC	BRASS / AISI 316L
BODY	BRASS / AISI 316L / CARBON STEEL
SPRING	C85 / AISI 316
SEAT	Elastomer, plastic o metal

CHARACTERISTICS	
Orifice diameter	38 mm
Orifice area	11.34 cm^2
Inlet connection	1 1/2" - 2"
Outlet connection	2 1/2"
Setting range	0,5 bar - 35 bar
Discharge coefficient kd	0,937 gas
Lift to discharge pressure	17 mm
Overpressure	10%
Blowdown	15%
Temperature range	-196° C +250° C
Fluids	Gas - steam

TYPE APPROVAL

DIMENSIONS			
	SLKL - 38H	SLKC - 38H	
A		80	
B		100	
C	280	315	
D	25	25	
E	70	70	
CH	70	70	

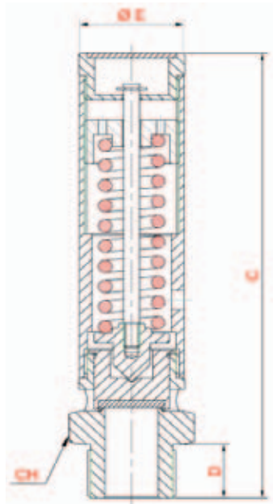

SLKL - 38H

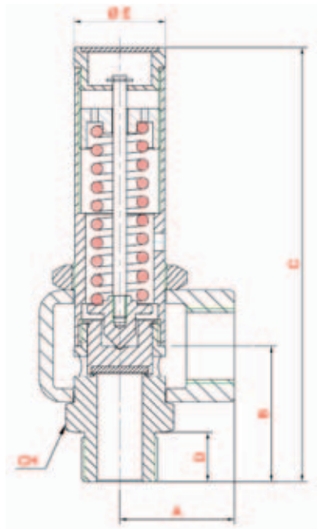

SLKC - 38H

CERTIFICATES

SLK

SERIES NOTE

Certificate

Standard ISO 9001:2015

Certificate No. 39 00 0701803

TÜV Rheinland Italia S.r.l. certifies:

Certificate Holder: COI Technology S.r.l.
Via della Liberazione, 29/d
20098 San Giuliano Milanese (MI)
Italy

Scope: Design and manufacturing of safety valves.

IAF sector: 17

Proof has been furnished by means of an audit that the requirements according to ISO 9001:2015 are fulfilled.

The due date for all future audits is 10-03

Validity: The certificate is valid from 2018-09-15 until 2021-09-14
First certification 2013

2018-09-15

TÜV Rheinland Italia S.r.l., Via E. Mattei, 3
I - 20010 Pogliano Milanese (MI)

Bescheinigung über die Hinterlegung der Dokumentation

Certification of acknowledgement of receipt

Hinterlegungsnummer / Deposit number: 557/Ex-Ab 2893/18

Gegenstand: Gerät / Typ / Subject: Equipment / type: Technische Dokumentation / Technical documentation

Valvole di Sicurezza / Security Valves

Serie SLKC, GLVC/ Series SLKC, GLVC

Anschrift / Address: COI TECHNOLOGY SRL
Via Della Liberazione 29/d
20098 San Giuliano Milanese (MI)
Italy

Die Unterlagen sind bei uns am 2018-06-28 eingegangen und werden unter o. g. Hinterlegungs-Nr. ordnungsgemäß gelagert bis 2028-06-28.
The documents were received 2018-06-28 and will be stored properly until 2028-06-28 under deposit number above.

Die TÜV Rheinland Industrie Service GmbH ist mit der Kenn-Nr. 0035 benannte Stelle für den Geltungsbereich der Richtlinie 2014/34/EU.
TÜV Rheinland Industrie Service GmbH has notified body number 0035 with the identification of the scope of Directive 2014/34/EU.

TÜV Rheinland Industrie Service GmbH
Anerkannte ATEX-Zertifizierstelle / ATEX-Notified Body No. 0035
Am Grauen Stein - 51105 Köln - Germany
(bearbeitende Stelle/executing unit:
Alfredstr. 81, 45130 Essen)

i.A. / p/o Diego Sirtori

2018-06-28

TÜVRheinland® Precisely Right.

CERTIFICATO
CERTIFICATE

CONFORMITÀ BASATA SULLA GARANZIA TOTALE DI QUALITÀ CON CONTROLLO DELLA PROGETTAZIONE
CONFORMITY BASED ON FULL QUALITY ASSURANCE PLUS DESIGN EXAMINATION

IN ACCORDO ALLA DIRETTIVA 2014/68/UE
ACCORDING TO DIRECTIVE 2014/68/EU

Certificato N. / Certificate No. I-202-IT/Q-18 0006 REV. 00

Fabbricante / Manufacturer: COI TECHNOLOGY S.r.l.
Via della Liberazione, 29/D
20098 San Giuliano Milanese (MI)
Italy

Si certifica che il sistema di qualità per la progettazione, la fabbricazione, l'ispezione del prodotto finito e le prove istituito dal Fabbricante soddisfa i requisiti della direttiva 2014/68/UE. Il Fabbricante è autorizzato a marcare i prodotti con:
We hereby certify that quality system for design, manufacture and final product inspection and testing established by the Manufacturer fulfills the requirements of directive 2014/68/EU. The Manufacturer is entitled to mark the products with:

CE 1936

Verificato in accordo alla direttiva 2014/68/UE / Tested according to directive 2014/68/EU: MODULO H1 / MODULE H1

Accessori di Sicurezza / Safety Accessories: VALVOLE DI SICUREZZA / SAFETY VALVES

Rapporto n. / Report no.: P301170040/38002/DR

Certificato di riferimento / Reference certificate: I-202-IT/H1-18 0007 REV. 00; I-202-IT/H1-18 0008 REV. 00
Emesso da / Issued by: TÜV Rheinland Italia
Scadenza / Valid until: 01/03/2028; 01/03/2028
O.N. n. / No.Bo. no.: 1936

Certificati di riferimento / Reference certificates: Vedi Allegato I – parte integrante del presente certificato / See Annex I – integral part of this certificate

Sito di produzione / Manufacturing plant: COI TECHNOLOGY S.r.l.
Via della Liberazione, 29/D
20098 San Giuliano Milanese (MI)
Italy

Prima emissione / First issue: 02/03/2018

Valido fino al / Valid until: 01/03/2021

Luogo e Data di Emissione / Issue place and date: Pogliano M.se (MI) 02/03/2018

Condizioni di validità sul retro / Validity term and conditions on reverse

TÜV Rheinland Italia S.r.l.

Ing. Paolo Gaglio
Organismo Notificato n. 1936
Notified Body no. 1936

TÜV Rheinland Italia ® S.r.l.
Via E. Mattei, 3
20010 Pogliano Milanese (MI) – ITALY
Tel: +39 02.939.687.1
Fax: +39 02.939.687.23

Mod. QMT_BSI_006.013 Rev. 02

www.tuv.com

ACCREDIA

TÜVRheinland® Precisely Right.

EAC

Серия RU № 0246592

ОРГАН ПО СЕРТИФИКАЦИИ Орган по сертификации продукции "ИВАНОВО-СЕРТИФИКАТ" Общества с ограниченной ответственностью "Ивановский Фонд Сертификации"; Адрес: 153032, Российская Федерация, Ивановская область, город Иваново, улица Станкостроителей, дом 1; Фактический адрес: 153032, Россия, Ивановская обл., г. Иваново, ул. Станкостроителей, дом 1; Телефон: (4932) 23-97-48; Факс: (4932) 23-97-48; E-mail: ivfs@mail.ru; Аттестат аккредитации № РОСС RU.0001.11АИ30 от 20.06.2014 г., выдан Федеральной службой по аккредитации

ЗАЯВИТЕЛЬ Общество с ограниченной ответственностью "ТехноЭксперт", Адрес: 191186, РОССИЯ, г. Санкт-Петербург, Невский пр-кт, д. № 22-24, лит. А, пом. 23, ОГРН: 1137847294860, Телефон: 89219442069, Факс: 88124297217, E-mail: technoexpert.spb@gmail.com

ИЗГОТОВИТЕЛЬ Фирма "COI TECHNOLOGY S.R.L.",
Адрес: ИТАЛИЯ, Via della Liberazione 29/d – 20098 San Giuliano Milanese (Milano),
Телефон: +390236689480, Факс: +390299767875

ПРОДУКЦИЯ Клапаны предохранительные (категория оборудования-4), серии GLV, SLK, типы: GLVC (PN 120 МПа; DN от 15 до 50 мм; Среда – жидкость, группа 2; Максимальная температура среды – 800 °C); SLKC (PN 80 МПа; DN от 15 до 50 мм; Среда – газ, группа 2; Максимальная температура среды – 800 °C); SLKL (PN 80 МПа; DN от 15 до 50 мм; Среда – газ, группа 2; Максимальная температура среды – 800 °C). Серийный выпуск, Европейская директива 97/23/EC.

КОД ТН ВЭД ТС 8481409009

СООТВЕТСТВУЕТ ТРЕБОВАНИЯМ ТР ТС 032/2013 "О безопасности оборудования, работающего под избыточным давлением"

СЕРТИФИКАТ ВЫДАН НА ОСНОВАНИИ Протокол испытаний № 141222/П-02И от 22.12.2014 г. - ИЛ ООО "Ивановский Фонд Сертификации" (Аттестат аккредитации № РОСС RU.0001.21АИ021 до 19.02.2015 г.), 153032, г. Иваново, ул. Станкостроителей, д. 1. Обоснование безопасности № 6/и от 20.08.2014 г. Акт анализа состояния производства № 141212/ПТС/РА от 16.12.2014 г., выдан ОС продукции "ИВАНОВО-СЕРТИФИКАТ" ООО "Ивановский Фонд Сертификации" (Аттестат аккредитации № РОСС RU.0001.11АИ30 до 01.03.2016 г.) 153032, г. Иваново, ул. Станкостроителей, д. 1. Сертификат системы менеджмента качества ISO 9001:2008 № 01 100 125538 от 05.03.2013 г., выдан ОССК "TUV Rheinland Cert GmbH", Германия.

ДОПОЛНИТЕЛЬНАЯ ИНФОРМАЦИЯ Договор на уполномоченное изготовителем лицо – ООО "ТехноЭксперт" № 6/и от 01.12.2014 г. Условия хранения продукции в соответствии с ГОСТ 15150-69. Условия хранения конкретного изделия, срок хранения (службы) указываются в приложениях к продукции товарной, эксплуатационной и/или эксплуатационной документации. Схема сертификации: 1с

СРОК ДЕЙСТВИЯ С 23.04.2015 ПО 02.04.2020 включительно

Руководитель (уполномоченное лицо) органа по сертификации

Эксперт (эксперт-аудитор)

Эксперты (эксперты-аудиторы)

Кабешев А.А.

NOTE:

- Modifications reserved by Coi Technology SRL.
- Dimensions and Materials can be changed without notice.
- Parts can be replaced by other materials acc. to customer specification.
- Please do not hesitate to contact our Commercial or Technical Department for further information on specific applications and special technical questions.

COI TECH
SAFETY VALVES

COI TECHNOLOGY S.r.l.
Via della Liberazione, 29/D
20098 San Giuliano Milanese (MI) Italy
Tel. +39 02 36 68 94 80
Fax +39 02 99 76 78 75
E-mail: info@coitech.it
www.coitech.it

LA CENTRALE COMUNICA.IT

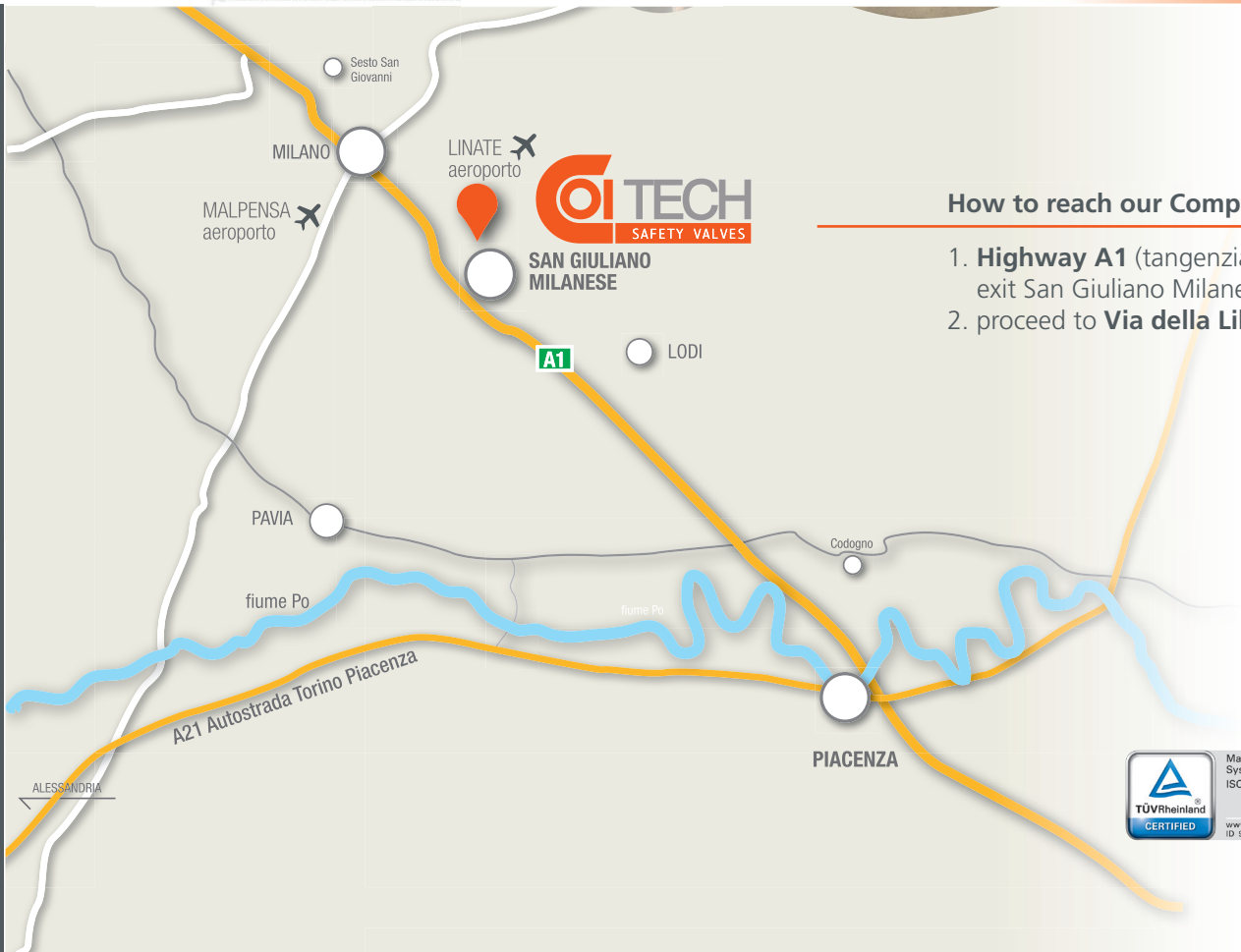

How to reach our Company

1. **Highway A1** (tangenziale Ovest) exit San Giuliano Milanese
2. proceed to **Via della Liberazione**

TÜVRheinland CERTIFIED
Management System ISO 9001:2015
www.tuv.com ID 9105022030

COI TECH_GLV ed.10-2021_rev.3